USE MANUAL

English

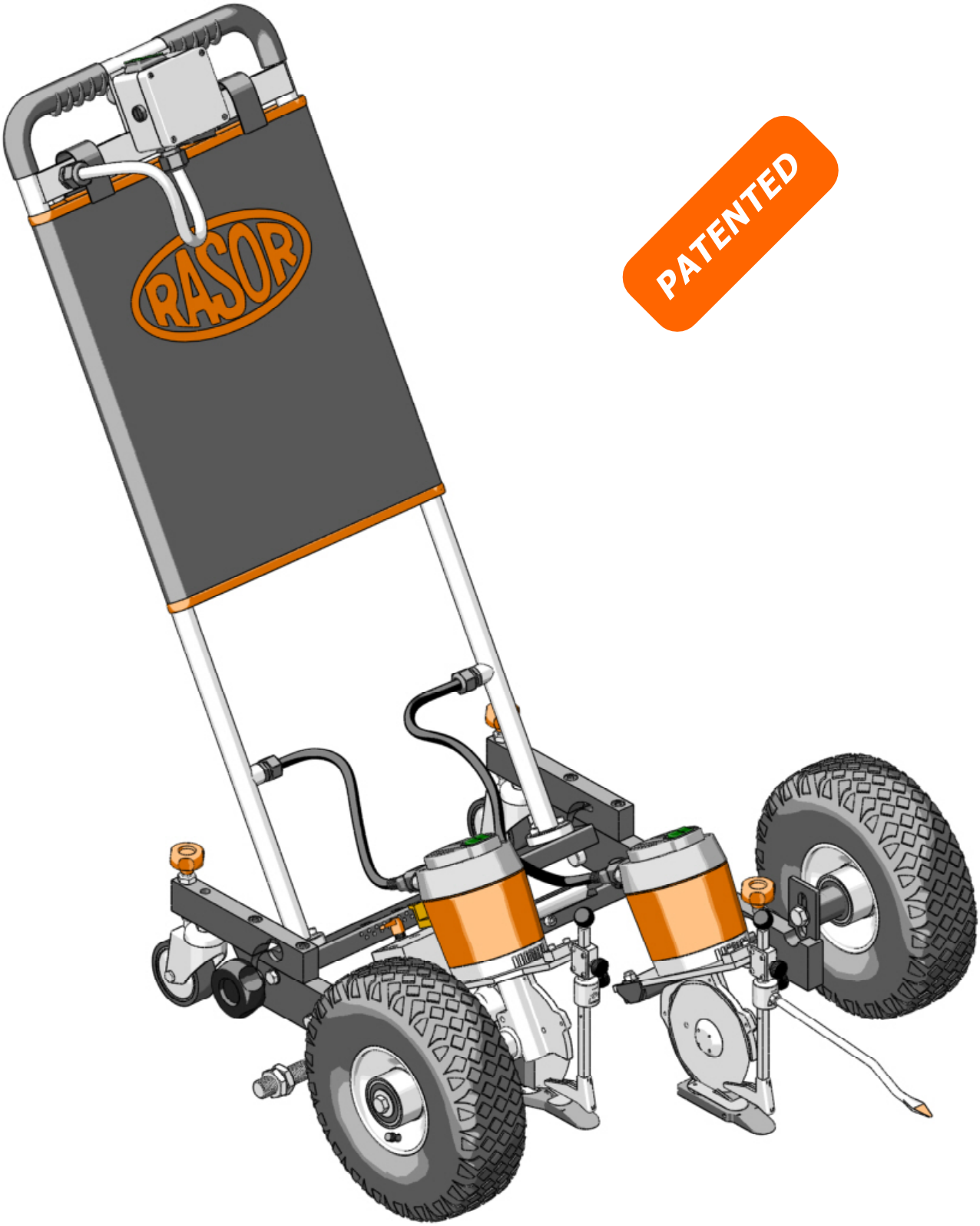

PATENTED

GREENCUTTER SERIES 2010
MOD. GC-09

RASOR®
dal 1946

ED.1-11/09

COMPANY

Rasor® Elettromeccanica S.r.l. was established in Milan in 1946 by the two promoting partners Spinelli and Ciminaghi. For more than sixty years it has been producing automatic cutting systems, cutting units for textile applications and electric and pneumatic cutters.

RASOR® dal 1946

Initially considered as a point of reference for cutting systems in the textile applications, the Rasor® products are nowadays widely used in other fields: chemical, automotive, nautical and sport sectors and in furniture manufacturing.

Rasor® can rely on the professional continuity of three generations, thanks to the precious support of the promoting partner, to his passion, dedication and great experience of seventy years.

The main characteristic of Rasor® is that each working phase, starting from the manufacturing of the product up to its packing and delivery is carried out in Rasor® premises by qualified operators who have professionaly grown up following the spirit of the company and of its founders. This ensures the high quality which Rasor® has always considered as essential since the beginning of its activity.

Following the innovative spirit mentioned above, our company is constantly focused on the improvement of the product quality, on the study and development of new materials and technologies.

ACKNOWLEDGMENT

Dear Customer,
thank you for choosing a Rasor® Elettromeccanica S.r.l. product.

Rasor® has been a reference point in the field of cutting systems in the textile, clothing, furniture, tailoring, sport, chemical, automotive, nautical and insulating material sectors for years. Its production has been always synonymous with reliability attested by many of satisfied customers.

Rasor® quality system supervises all the company activities in order to provide the Customer with a service that meets its needs and expectations in terms of product quality, delivery reliability and stock of finished products.

All the parts of the devices have been planned and produced to guarantee an optimum performance. In order to keep the high quality level and the long reliabilty of the Rasor® products, it is recommended to use only original spare parts and to contact the head office for any maintenance work.

1. GENERAL SAFETY RULES

This manual is an integral part of GreenCutter and must be carefully read before using it since it gives important indications with regards to its safe installation, use and maintenance. Keep it with care.

Before using GreenCutter, read carefully the following general safety rules.

- PACKAGING.
  After taking off the packaging make sure that the machine is intact. In case of doubt do not use it and contact an authorized service centre. Do not leave pieces of packaging (plastic bags, foam polystyrene, boxes, etc.) within the reach of children or disabled persons since they are potential sources of danger.
- AVOID DANGEROUS ENVIRONMENTS.
  Prevent the GreenCutter components from coming in contact with damp or wet surfaces.
- KEEP CHILDREN AWAY.
  Unauthorized persons, in particular children, must be kept away from the working area.
- FEED CABLE.
  Prevent the feed cable from coming in contact with hot objects, pointed surfaces or sharp edges. Never pull the feed cable of the machine. It must never be replaced by the user. If necessary contact professionally qualified staff.
- KEEP THE WORKING AREA ALWAYS IN ORDER.
  The workplace must always be kept in order and well lightened; liquids or oil traces must not be present.
- ALWAYS USE GREENCUTTER PROPERLY.
  Use the machine only to carry out the works it has been designed for; do not use it improperly.
- OBSERVE THE USE OF THE TOOLS.
  Do not cut excessively thick materials and always check blade conditions.
- AVOID ACCIDENTAL STARTINGS.
  Before connecting GreenCutter, make sure that everything is installed properly.
- CLOTHING.
  Do not use large clothes or accessories that might get stuck in the moving parts.
- GOGGLES AND PROTECTIVE METAL MESH GLOVES.
  Always use goggles, protective metal mesh gloves approved by Rasor® during use and maintenance operations (according to UNI EN 388:2004 standard).
- SPARE PARTS.
  During maintenance and replacement operations use only original spare parts. Blade maintenance must be only performed by Rasor® technicians.
- INSTALLATION.
  Any installation that is not in conformity with these specifications could jeopardize your safety and cancels the warranty.

Informative letter

The installer and the maintenance man must know the content of this manual. Although the main features of the machine described in this manual are not subject to change, **Rasor® Elettromeccanica S.r.l**. reserves the right to modify the components, details and accessories it deems necessary to improve the machine or to meet manufacturing or commercial requirements at any time and without being obliged to update this manual immediately.

WARNING

Rasor® Elettromeccanica S.r.l. machines have not been conceived to work in areas at risk of explosions and at high risk of fire and they cannot cut wet or damp materials. Moreover, they cannot work in case of rain.
In case of damage or malfunction, the machine must not be used until the Customer Care Technical Service has repaired it.

Customer Care Technical Service

RASOR®
dal 1946

For any information, please contact
RASOR®ELETTROMECCANICA S.r.l.
Via V. Caldesi, 6; 20161, MILANO (MI) - ITALY
Tel: +39.02.66221231; Fax: +39.02.66221293
e-mail: sportline@rasor-cutters.com
web: www.rasor-cutters.com

WARNING
The original configuration of the machine must not be changed at all.
On receiving the machine make sure the supply corresponds to what has been ordered.
In case of non-compliance immediately inform Rasor®.
Also make sure the machine has not been damaged during transport.

2. TRANSPORT AND PACKING

To transport the machine only the systems listed afterwards can be used. Anyway make sure the means of transport and the lifting devices can bear the weight of the machine with its packaging (about 50 Kg):

- Transport in wooden cage or case.

WARNING
The staff in charge of handling must use protective gloves.

While lifting or handling the machine or any of its parts, clear the working area, by leaving a sufficient safety area around it to avoid damaging people or objects that could be inside it.

All options ordered with the machine are put in the same packaging.

The guide handle can be folded down so that it leans on the machine structure; then it is fixed to it by rotating the two side knobs "A" clockwise (see picture 1). The machine can be therefore transported as shown in picture 2.

WARNING
In order to fold down the handle, it is necessary that the right motor is positioned at a distance of maximum 120 mm from the fixed machine.

The machine is then wrapped in thermoplastic material to ensure its protection. It is then packed in a wooden cage or case in order to be protected from impacts and bad weather. To lift it use a transpallet (see picture 3).

Follow the directions on the packing before handling and opening it. The packing dimensions vary according to the machine ordered and to its configuration, but they usually are 120x80x50 cm. The machine is fastened inside the wooden cage or case by means of wedges and beams, in order to avoid any movement during transport.
Always place the forks in a barycentric position as shown in picture 3.

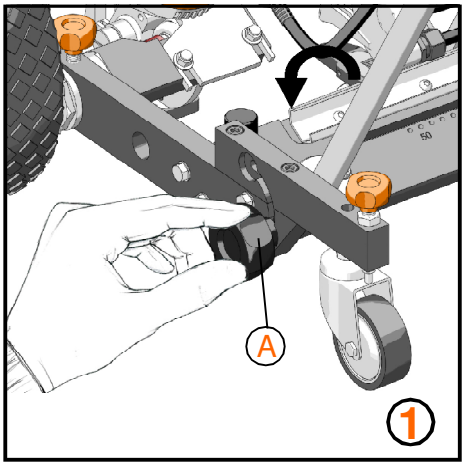

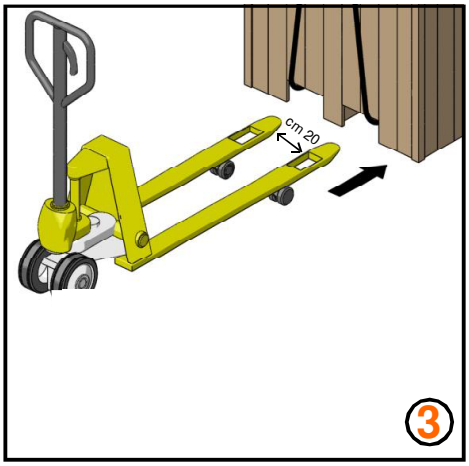

If the machine is delivered in a wooden cage or case, unpack it by means of a hammer with nail puller.
Open the case by removing the lateral nails which fix the wooden covering to the base of the pallet; then pull it out from above.
Remove the wedges and beams which lock the machine wheels and straighten the guide handle locking it as indicated in chapter 11.

WARNING
Always use protective gloves (see picture 4).
Always pay attention to any projecting nails.
It is advisable to keep the wooden packaging so that it can be used in case of return/ warranty. Otherwise, it must be delivered to associations in charge of its disposal and recycling.

When transporting and storing the machine, ensure that the temperature remains between - 5 and 50°c.
Whenever the machine has to be stored, make sure that it is not put in areas of excessive humidity.

WARNING
When storing the machines, never stack containers (see picture 5).

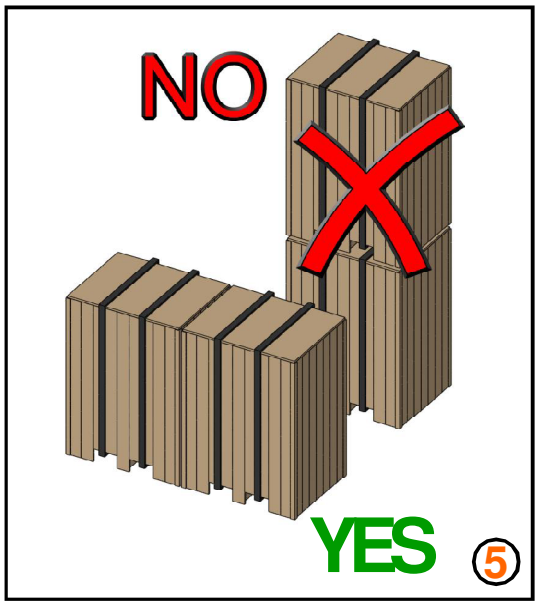

3. PLATE DATA

The manufacturer's identification and CE STANDARD 2006/42/CE conformity plate (see picture below) is located on the front part of both the cutting units.
The plates must not be removed at all, even if the machine is resold. Always refer to the serial number (written on the plate itself) when contacting the manufacturer.
Several safety warnings are printed on a card which is applied to the control box of the machine; such warnings must be strictly followed by everyone dealing with the machine.
The company is not to be held responsible for damage to property or accidents to people which might occur if the above-mentioned warnings are not observed. In such a case, the operator is the only person responsible.

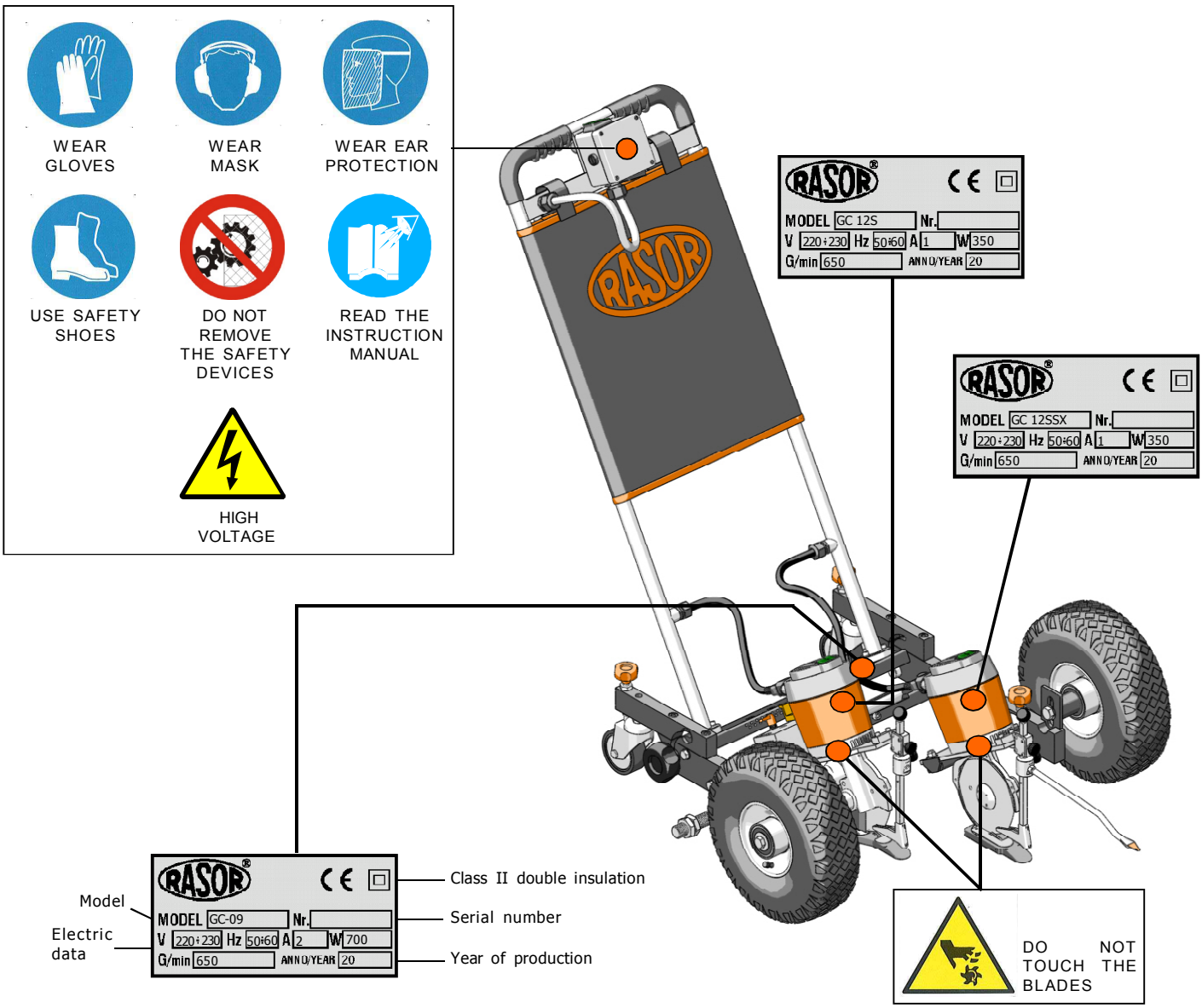

PATENTED

RASOR®
dal 1946

4. PRODUCT DESCRIPTION

GreenCutter GC-09 is the new Rasor® double blade electric cutting equipment for synthetic turf in sport plants. GreenCutter GC-09 is the latest generation system and can be used either for turf lining and edging. It is used for rapid and easy single cuttings (edge), double cuttings (lining) and cuttings of the overlapping turfs for a perfect coupling of the rolls. The width of lines can be adjusted between 5 and 20 cm.

The twin blade-counterblade-always-in-contact cutter principle enables GreenCutter GC-09 to produce sharp cuts, without fraying of turf material. It can be used to cut both new and old design turfs without height limits. The cutting speed is up to 1 m/sec.

A special kit to cut curved lines allows GreenCutter GC-09 the realization of circular arcs lining, such as a field center and lunette, with an accuracy of the order of millimeters over a radius of the order of several meters. The kit allows the realization of all radiuses commercially used for the lining of soccer fields for 5, 6, 7 and 11 players.

It is ideal for layers and producers of synthetic turfs, reduces drastically installation time, eliminates blades and knives improving remarkably the synthetic turf quality and reduces the installation crew labour.

Device Components					
1	Cutting unit starting button	9	Turf opening system	17	Adjustable motor plate
2	Guide handle with anti-slip rubber	10	Teflon®-coated cutting base	18	Cutting unit switch
3	Main switch on control box	11	8-edge blade, Ø 120 mm, HSS steel	19	Bag containing cable
4	Cutting unit electric connection	12	Electric motor	20	Sliding guide
5	Guide handle locking knobs	13	Connection for curved line cutting	21	Line width reference indicator
6	Front wheels with air tube	14	Rear wheels 360°	22	Guide handle rubber support
7	Frame height adjustment	15	Rear wheel locking device	23	Rear wheel height adjustment
8	Line aiming system	16	Readable marking for cutting width adjustment	24	Left cutting unit. It can be lifted for the single cutting

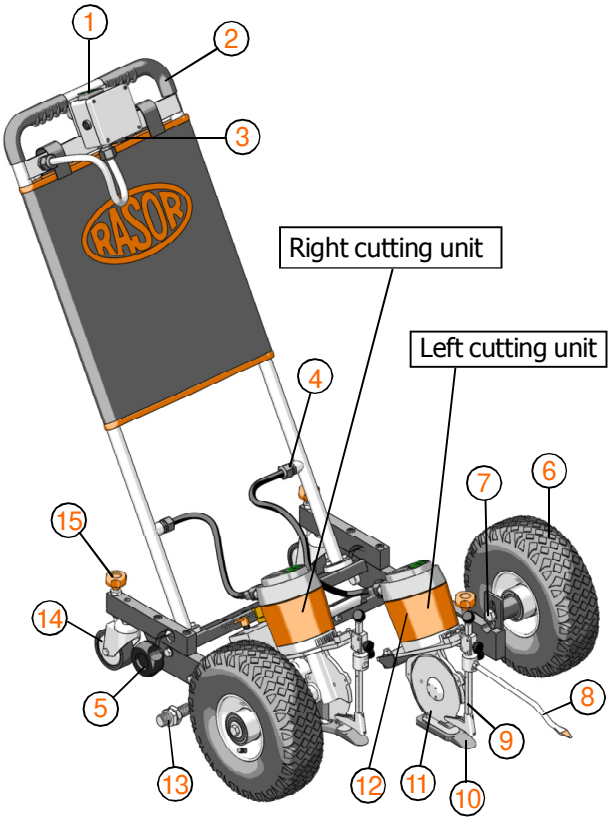

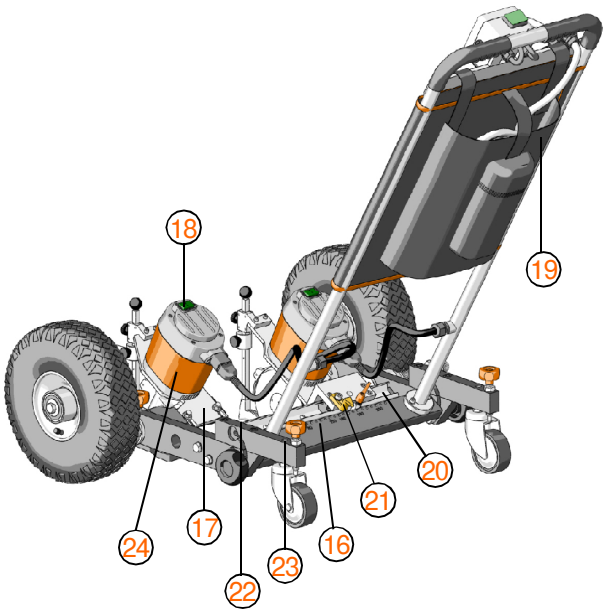

5. TECHNICAL FEATURES

The machine structure is made up of large sized rods and sections that give the machine a notable rigidity thereby reducing vibrations and mechanical movements to a minimum. The solutions adopted allow to obtain precise cuts without fraying with great efficiency and without the machine seizing up. Several parts of the machine require no maintenance.
All machine parts are easily accessible: by means of a few simple adjustments it is possible to change the cutting width as quickly as possible.

Structural features	
Frame	demountable, painted aluminium
Guide handle	Eye-level, stainless steel with anti-slip rubber; 120° foldable
Front wheels	Fixed with air tube, 28 cm (11")
Rear wheels	8 cm (3,15"), 360° rotary, with locking system
Bag containing cable and tools	With zip in the handle
Dimensions of open machine	110x65x90 cm
Dimensions of closed machine	120x65x30 cm
Machine weight without packaging	Kg. 24 (with feed cable)
Cutting features	
Double specular cutting unit (right and left)	Rasor® GC 12S - GC 12SSX with cutter lifting system (for single cutting)
Cutting width	Adjustable from 5 to 20 cm by means of a carriage on ball bearing with readable marking on the frame
Cutting bases	Teflon®-coated anti-adhesive
Cutting line aiming system	Steel
Turf opening system	Adjustable in height
Cutting speed	1 m/sec (*) max
Electric features	
Type	Single phase
Voltage	220 V (110 V on request)
Frequency	50-60 Hz
Amperage	2 A max.
Power	700 W
Starting system	According to CEI regulations, by means of release push-button and LED
Safety fuse	2.5 A (4 A if 110 V) on each cutting unit
Control box	Watertight
Switches	Main On/Off switch and safety switch on each unit
Electric cable	10 m long flame-proof cable with plug

The technical data is only indicative and it can be changed without notice.

* The machine working speed depends on its configuration, on the type and thickness of the material to be cut and on the blade sharpening.

Minimum light for working operations: LUX 200

6. DIMENSIONS

The machine has the dimensions indicated in the pictures. These measures are indicative, as some models may have different dimesions.

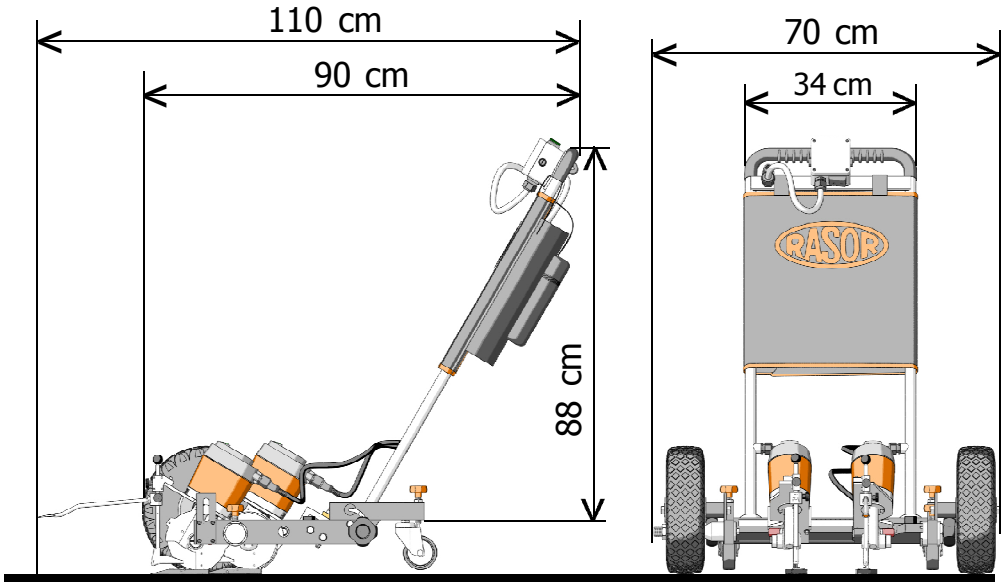

7. NOISE LEVEL

The maximum noise level measured at the rear part of the machine is 71,5 dB (A).
Noise tests have been carried out in compliance with Standard ISO 11202 (1995). GreenCutter's noise levels, measured at different distances (without any sound wave filtering system) are:

FRONT PART
65.5 dB(A) at 1.5m.
64.0 dB(A) at 3.0m.
LEFT SIDE
69.0 dB(A) at 1.5m.
67.0 dB(A) at 3.0m.
REAR PART
71.5 dB(A) at 1.5m.
69.0 dB(A) at 3.0m.
RIGHT SIDE
60.0 dB(A) at 1.5m.
59.0 dB(A) at 3.0m.

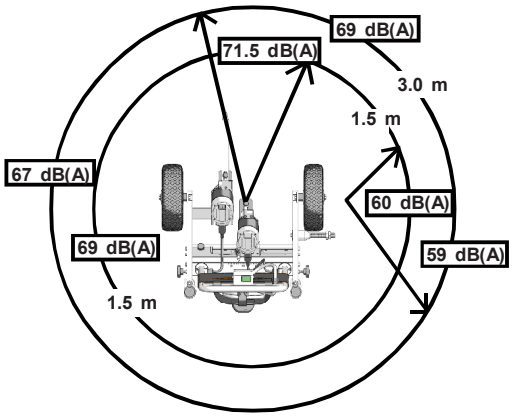

NOTE
Noise tests have been carried out both frontally (see picture above) and laterally. It is advisable for GreenCutter's owners to verify the compliance with the standard concerning safety of workers: Italian legislative decree N.277 ITEM IV (DATED 15-08-91).

8. FIELD OF APPLICATIONS

GreenCutter has been designed, constructed and assembled to cut synthetic, plastic, rubber turf or any other surface to be edged or cut into strips by means of eight-edged blades and counterblade.
This equipment must not work:

- in areas prone to explosions;
- if there are fine dust or corrosive gases;
- on wet or damp materials;
- in the rain.

It is forbidden to use GreenCutter for purposes different from the above-mentioned ones.

9. USE WARNINGS

We recommend following the indications below in order to always work in safety conditions.

- All the operations must be carried out complying strictly with the safety rules of the country where the machine has to be installed.

- It is STRICTLY FORBIDDEN to smoke during the installation or adjustment operations of the machine.

- The Customer undertakes to comply with and make his staff observe all the rules and regulations in force concerning safety, prevention of accidents and health in the work place. Therefore, the Customer assumes the responsibility to strictly follow all the rules and regulations in force, as well as the special provisions in force in sport and public installations the Customer declares to know after receiving the relative necessary information.

- The use of any tool, equipment or machinery will be wholly at Customer's risk who, in any case, will be obliged to check, before and during the use, the compliance of these tools, equipment and machineries with all the prescriptions for the operations relating to equipment or parts of the plant at high risk of accident. The Customer shall provide the Manufacturer with a quality control plan of the intervention to be approved.

- Should the Customer need to introduce dangerous substances or mixtures in the working area for the execution of the activity, he would be obliged to ask Rasor® for the authorisation, subject to prior supply of the safety sheets of the same substances or mixtures.

- The Customer shall equip his own personnel with all the individual safety protections for the execution of the works, as well as with the ones which might be prescribed by the Manufacturer due to specific danger conditions of the plant or of the area where the personnel must work.

- Only one operator must use the machine always standing behind the guide handle. Do not make any adjustment while blades are working.

- Always pay attention to the electric cable position to prevent it from being cut by blades.

- **If the machine is used for edging operations, always turn the motor off when it is not working.**

10. RESIDUAL RISKS

Even though this machine is safe, operators must pay attention to preserve their and other people's safety.

☹ At the end of the working operations, motors and metal parts might be hot.

WARNING ⚠

If the machine is used at night, the minimum light required is 200 lux.

11. PREPARATION FOR CUTTING

First of all, it is necessary to straighten the guide handle and put it in working position (two mechanical clamps are used as reference, lock the guide handle by tightening the two knobs shown in picture 6).
Make sure that the electric lines are able to feed the machine correctly in conformity with the safety regulations (for the required features see chapter 5).

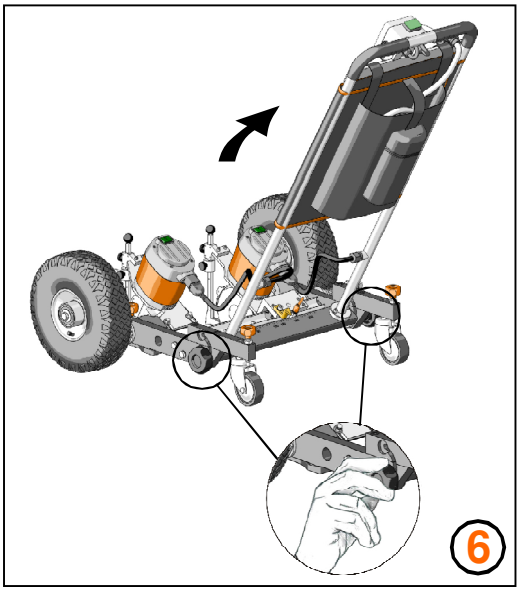

WARNING ⚠

The supply voltage of this machine is 230 V 50 Hz.
The machine is delivered with 10 m electric cable located in the rear bag. The electric cable must be connected with an industrial three-pin plug (see picture 7).
To avoid possible damages to the electric cable during handling operations, it must be left in the rear bag of the machine.

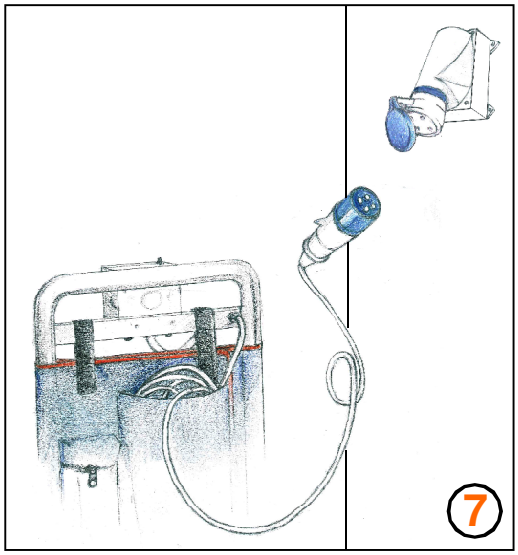

WARNING ⚠

Do not use adapters and/or multiple sockets.
It is advisable to install on the machine a magneto-thermal device.
GreenCutter GC-09 is a class II electrical equipment, therefore it does not need any earthing.

After connecting power supply, it is necessary to prepare/ adjust the machine according to the cut to be performed.

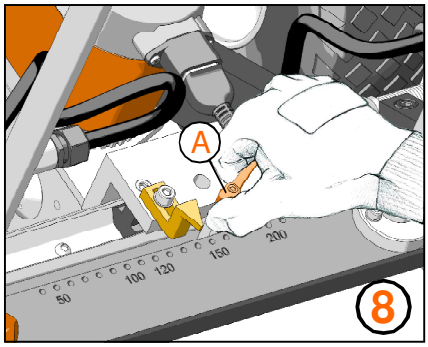

DOUBLE CUT (LINING):

First of all, adjust the distance between the blades of the two units (only the right cutting unit is mobile) by rotating the orange handwheel "A" located behind the right motor (see picture 8).
Loosen the motor manually, then hold it from its upper part and move it leftwards or rightwards according to the width of the strip to be cut (from a minimum value of 5 cm to a maximum value of 20 cm) (see picture 9).
Once the value has been set, lock the motor by tightening the previously loosen handwheel. Use also the graduated guide located behind the motor.
Position the GreenCutter in the cutting direction by aligning line aiming system "B" with the cutting line (see picture 9).
Put the turf over the Teflon®-coated bases as shown in picture 10.

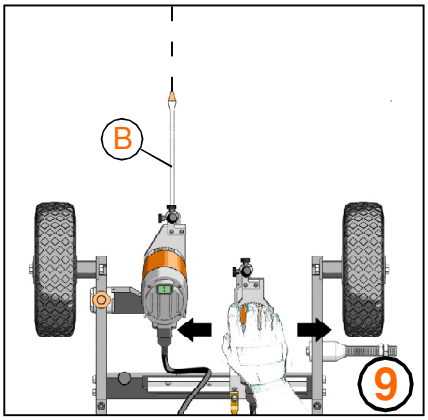

WARNING ⚠

Adjust turf opening system "C" by loosening knob "D", so that the distance between blade "E" and base "F" is about 0,5 cm.
If turf opening system "C" is too close to base "F", the machine movement on the grass could be difficult (see picture 11).
If turf opening system "C" is too high, it is possible that the machine cuts too much turf compromising the junction quality.

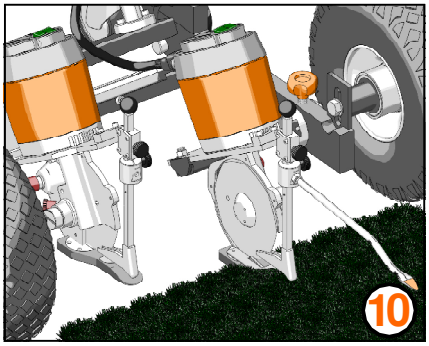

GreenCutter is equipped with a system which allows the rear wheels to be locked (by means of knob "G", as shown in picture 12) so that it is possible to make linear cuts preventing the machine from side-skidding.
The knob end must be inserted in the proper seat of the wheel.

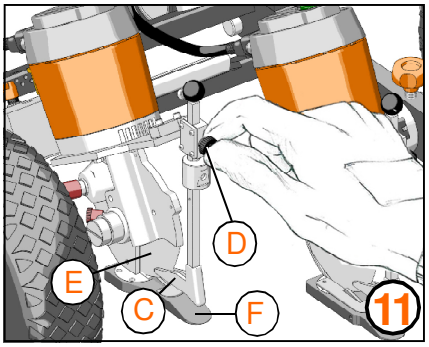

WARNING ⚠

In order to cut curved lines, the rear wheels must be free to rotate.

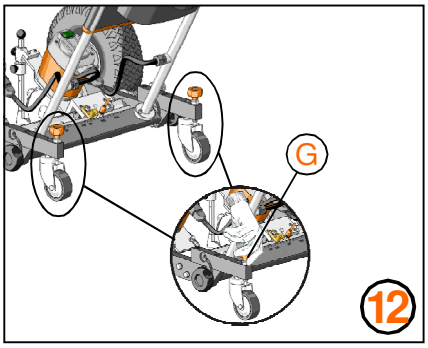

SINGLE CUT (EDGING):

First of all, it is necessary to move line aiming system "A" from the left to the right cutting unit (see picture 13).
In order to carry out this operation, unscrew line aiming system "A" and screw it on the same support of the right unit. Once the correct position has been found, fasten it by tightening proper nut "B".

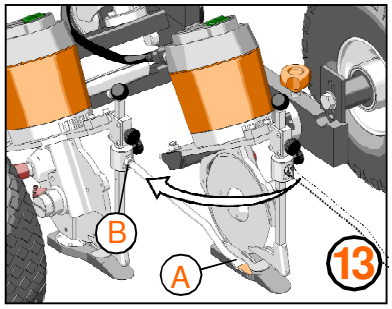

Unplug the left cutting unit, loosen knob "C" and fold down the cutting unit. Then screw knob "C" again (see picture 14).

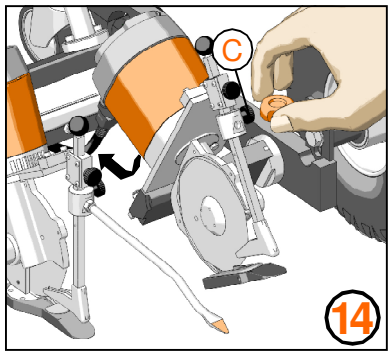

Position the GreenCutter in the cutting direction by aligning line aiming system "A" with the cutting line.
Put the turf over the Teflon®-coated base (see picture 15) and adjust the turf opening system as described in the previous paragraph.

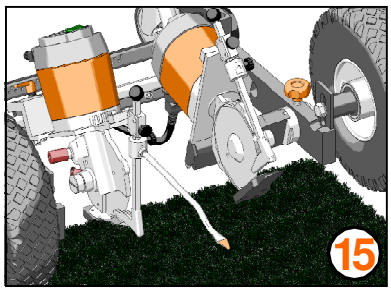

WARNING ⚠

In case of transport/maintenance, it is possible to bend in line aiming system "A" by unscrewing black knob "D" (see picture 16).

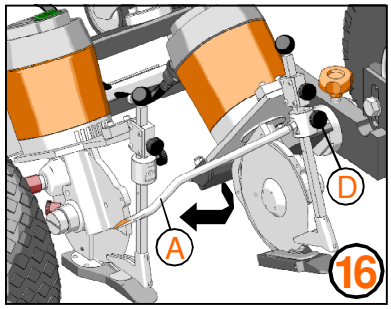

12. FRAME HEIGHT ADJUSTMENT

If the machine is used on uneven or stony grounds, it is possible to vary the frame height by adjusting the wheels.
Adjust the height of the front wheels by unscrewing nut "E" by means of an 18mm spanner (wheel stroke ± 50 mm) as shown in picture 17.
Adjust the height of the rear wheels by unscrewing nut "F" located over the wheel by means of a 19mm spanner (wheel stroke ± 30 mm) as shown in picture 18.

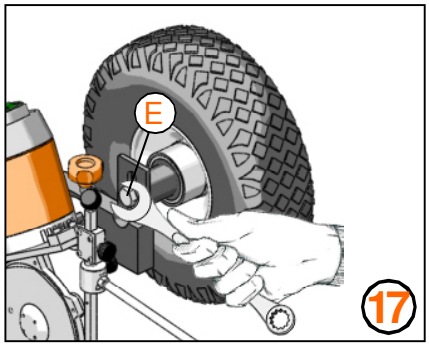

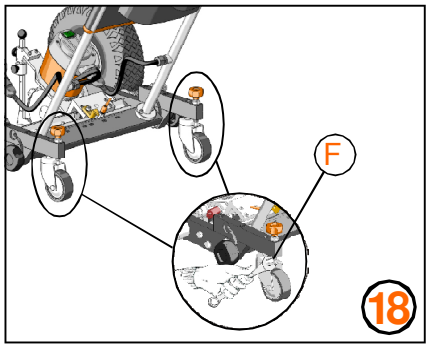

13. CUTTING

Once the adjustments indicated in the previous chapters have been carried out, it is possible to start the cutting operations.
First of all, check the conditions of the material to be cut (thickness, dampness, differences of level, parts made of unproper material).
Adjust the position of the turf opening systems as shown on page 13; turn the machine on by means of the proper button located on the guide handle, then drive the machine for some metres checking that the cut is made correctly.

Check that the cut strip is wide enough. Otherwise move the right cutting unit in the correct position.
Go on at constant speed avoiding abrupt movements (see picture 19).
If the machine should touch the junction point of two rolls, it could get stuck. In this case just back up some centimeters and tilt the machine forwards so that the cutting bases go under the plastic of the junction (see picture 20).
Then cut normally the turf with the plastic too.
If it is necessary to start cutting not from the external part of the roll (eg. field center circle cutting), create some openings to slip the cutting bases under the roll.
By means of a cutter, make an incision on the material to be cut for a length of about 5 cm (see picture 21).
Slip the bases tilting the machine forwards and go on cutting.

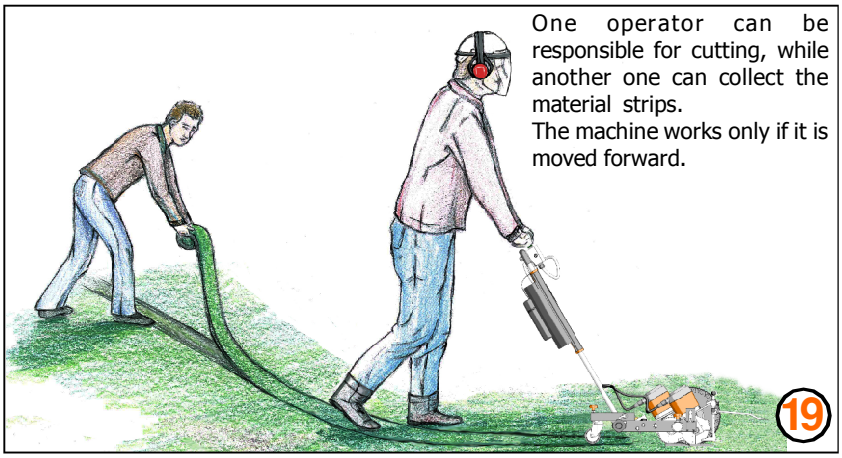

One operator can be responsible for cutting, while another one can collect the material strips.
The machine works only if it is moved forward.

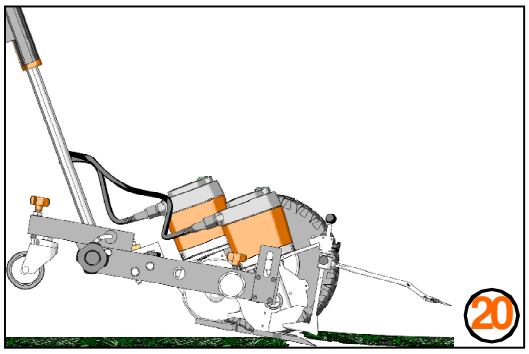

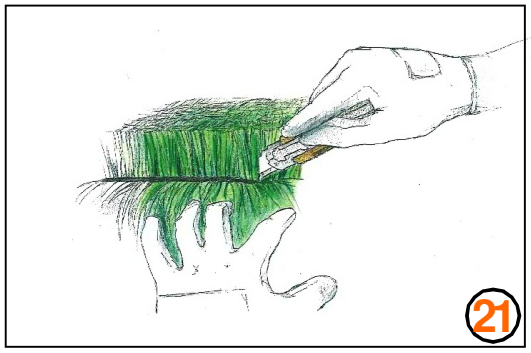

14. CUTTING UNIT MAINTENANCE

GreenCutter does not require special maintenance operations, but it is always necessary to verify that blade and counterblade are always in contact.
Material rests or dirt between these two parts might seriously compromise the cutting quality and the correct working of the machine.
It is important to clean the machine at the end of each cutting operation.

Every 8 working hours it is necessary to grease gears by means of the proper lubricating nipple "A" shown in picture 22.
Remove plug "A" and fill it with lubricating grease. Screw plug "A" again for few turns.
Screw plug "A" some turns every 8-10 continuative working hours of the machine.

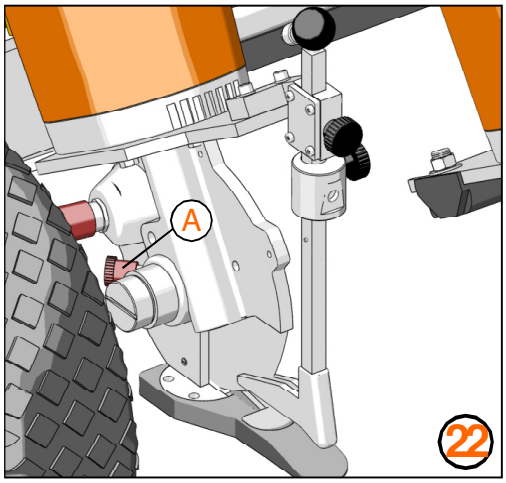

Note: Use ISO UNI XM2 oil for the guide and lithium grease supplied by Rasor® for the gears.

15. BLADE SHARPENING

Each time 1000 meters of material are cut, it is necessary to sharpen the blades. This operation must be carried out by specialized staff equipped with cut resistant gloves (standard UNI EN 388-EN407, for cut resistant gloves).
To carry out the blade sharpening, do as follows:

1) Turn the machine on;
2) Press push button "B" (picture 23) which allows to push grinding wheel "C" against the blade;
3) Keep on pushing the grinding wheel on the blade for 2-3 cycles of about 3-5 seconds (the blade's diameter is 120mm with eight sides);
4) Repeat the same operation for the second blade;
5) Perform some cutting operations to check the correct sharpening.
5) Occasionally check the grinding wheel wear. If it is worn-out or uneven, it must be replaced.

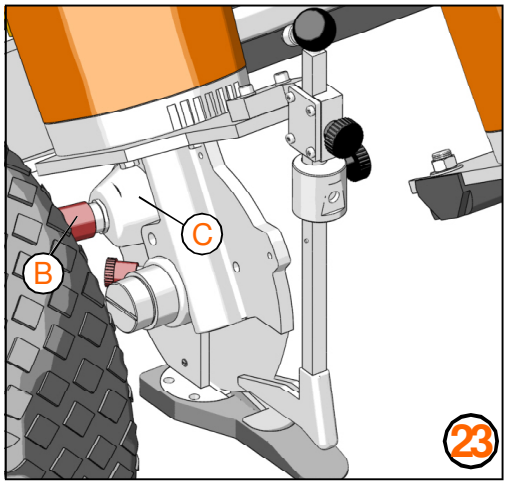

WARNING ⚠

If the blades should lose their cutting efficiency despite their sharpening, they must be replaced.

16. BLADE REPLACEMENT

If the blade of the cutting unit is no more able to cut (even after repeating the sharpening operation several times), it is necessary to replace it. In order to carry out this operation, use butterfly wrench "1" and drift "3" locking the blade (shown in picture 24).
In order to replace the blade, proceed as follows:

1) Use some protective gloves in compliance with Legislative Decree 242 dated 19 march 1996 (use of personal protection devices);
2) Remove the whole assembly "A" from the cutting unit by unscrewing the two socket head screws "B" and extracting the two washers "C" as indicated in picture 25.
3) Insert drift "3" (see picture 24) into hole "D" (see picture 25) in order to lock the blade (the hole in the blade must correspond to the hole in the structure).
4) Use butterfly wrench "1" in order to unscrew nut "E" and remove blade "F" (see picture 26).
5) Replace the worn blade with the new one "2", being careful to center the blade on the shaft, in the correct position, and remember to assemble it so that the writing Rasor can be seen by the operator.
6) Assemble the turf opening system again and sharpen the blade.
7) Repeat the same steps for the other cutting unit, then proceed cutting.

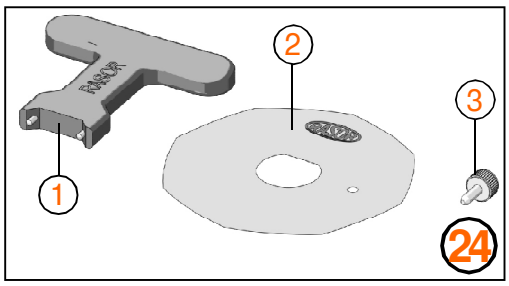

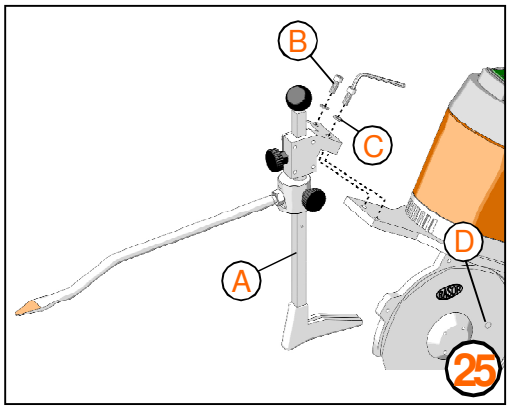

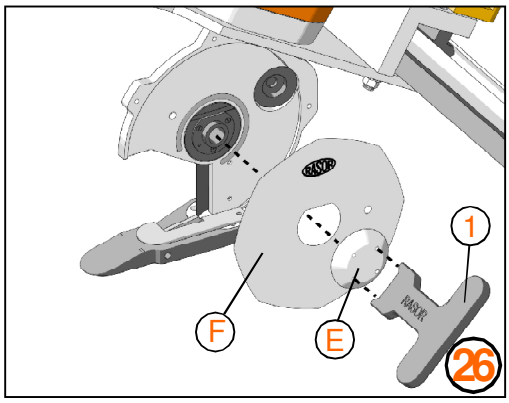

17. MOTOR BRUSH REPLACEMENT

Worn motor brushes could create a cutting unit malfunction (no starting, intermittent start, etc.), therefore it should be better to verify their wear periodically.
Open the motor cover by unscrewing 4 screws "B" on the cutting unit head (see picture 27). Remove the metal contacts that close the brushes with a slotted screwdriver (see picture 28). Remove the brushes and check their wear: if the graphite has a lenght shorter than 15 mm or it is uneven, replace it (see picture 29).
Close the metal contacts again by making sure that they adhere well to the metal part of the brush. Finally close the motor cover again.

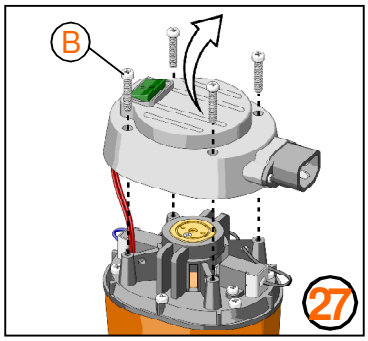

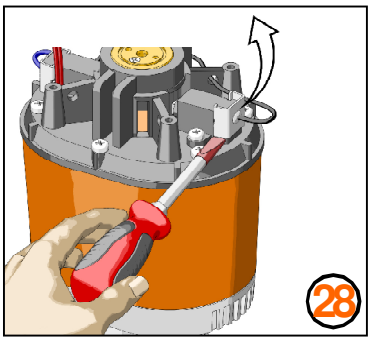

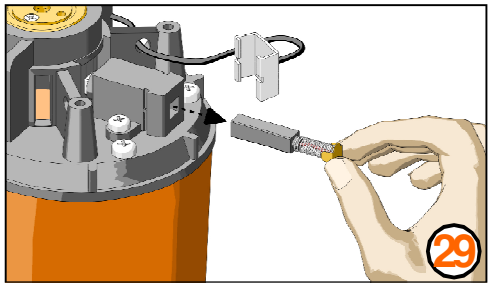

18. TROUBLESHOOTING

✖ PROBLEM	➡ SOLUTION
The machine does not start or works intermittently	Check the main power supply
	Turn the main switch to ON position
	Check the position of the switches on the cutting unit cover
	Check the fuse integrity
	Check the motor brush wear
The material is not cut or the machine has difficulty in going on/cutting	Check the blade sharpening
	Check the height of the turf opening system: if it is too low, the machine has difficulty in going on
	Check the material thickness
	Check there are no hindrances for wheels or cutting bases
	The machine probably run into a junction: proceed as described in this manual
	Check that blade and counterblade are in contact. Otherwise, remove any dirt or material rests from the components
The machine does not move along a straight line	Check the rear wheels: they must be locked
	Check the turf: it must be put over the cutting bases
	Check the pressure of the front wheels: max 2.5 bar
The machine is noisy	Check the wear of the gear
	Lubricate the gear
	Disassemble the blades and remove the material rests

19. DISPOSAL

When GreenCutter can not be repaired anymore or it must be dismantled, it must not be thrown in a dump but it must be delivered to the proper local body which will see to its disassembly and to the differentiated recycling of its materials. Most of the material the machine is manufactured with is recyclable. When GreenCutter is put out of service it is necessary to separate the different materials for a further use or for a differentiated disposal. All the machine materials are not toxic or dangerous for the operator health, therefore they can be handled without particular precautions.

WARNING ⚠

The disposal of the equipment and of the components at the end of their life must be performed by qualified staff trained to handle and, if necessary, to disassemble the machines. Use only suitable equipment in compliance with the standards and the rules in force.

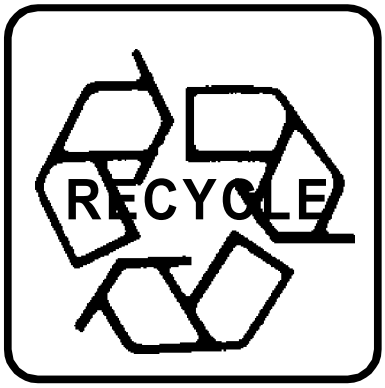

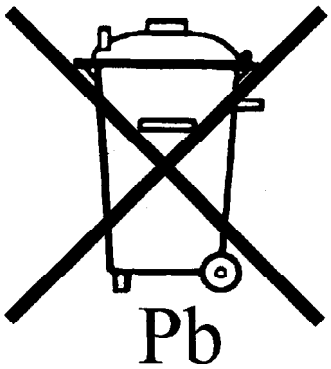

20. SPARE PARTS / EXPLODED VIEW

CODE	DESCRIPTION	CODE	DESCRIPTION	CODE	DESCRIPTION	CODE	DESCRIPTION
GC 09001	PLASTIC CONTROL BOX	GC 09026	SUPPORT FOR TURF OPENING SYSTEM	GC 09F25	GLASS FUSE 2.5 A (220 V)	SW126101	BLADE GUIDE PIN series > 2001
GC 09001CPL	PLASTIC CONTROL BOX (COMPLETE)	GC 09027	CLOSING PLATE WITH SCREWS	GC 09F40	GLASS FUSE 4 A (110 V)	SW126102	DOWEL
GC 09002	FUSE CARRIER	GC 09028	TURF OPENING SYSTEM BALL	GC 09-FAS	FRONT BAND SUPPORTING THE CABLE GC-09	SW126103	SCREWS 2,5MA FIXING THE RING BEVEL GEAR
GC 09003	KNOB FOR LOCKING THE REAR WHEELS	GC 09029	MOTOR BRUSH	GC 12SHSS	8-SIDE BLADE Ø 120 mm, H.S.S. STEEL	SW127201	GEAR BEARING R6 series > 2001
GC 09004	INDUSTRIAL THREE-PIN PLUG - 220 V	GC 09030	COMPLETE ROTOR 220 V - 350 W	S8676S	SPRING WITH DOWEL	SW127500	GEAR BEARING ADJUSTING RING
GC 09004A	INDUSTRIAL THREE-PIN PLUG - 110 V	GC 0903001	COMPLETE ROTOR 110 V - 350 W	SW1022S	MOTOR FRAME WITH MAGNETS WITHOUT HANDLE	SW127501	ADJUSTING RING SECURITY DOWEL
GC 09005	HANDLE WITH BLACK RUBBER	GC 09031	WORM SCREW	SW1029S	FEEDING CIRCUIT O.E.M.	SW127502	WASHER
GC 09006	FRONT WHEEL GC-09	GC 09032	BRONZE RING BEVEL GEAR	SW1037S	CIRCUIT CLAMP SCREW O.E.M.	SW127600	CLOSING PLUG
GC 09007	INSULATING CABLE GLAND M16	GC 09032CPL	COMPLETE GEAR PAIR, WITH PIN	SW107900	COUNTERBLADE SUPPORT CLAMP SCREW	SW127801	PLATE SECTOR
GC 09008	INSULATING CABLE GLAND M12	GC 09033	EMERY GRINDING WHEEL	SW108200	COUNTERBLADE CLAMP SCREW	T100102	CAP WITH OPENING series > 1999
GC 09009	STAINLESS STEEL HANDLE	GC 09033CPL	COMPLETE SHARPENING DEVICE	SW108700	EMERY GRINDING WHEEL PIN	T100200	MOTOR CAP CLAMP SCREW
GC 09010	REAR WHEEL LOCK NUT	GC 09034	COMPLETE MOTOR SUPPORT - GC 12S	SW108800	EMERY GRINDING WHEEL SPRING Ø 11 mm	T100201	SOCKET CLAMP SCREW
GC 09011	KNOB FOR HANDLE ADJUSTMENT	GC 09034SX	COMPLETE MOTOR SUPPORT - GC 12SSX	SW108900	SHARPENING DEVICE BUSH	T100300	ADJUSTING RING CLAMP SCREW
GC 09012	THREADED CONNECTION FOR CUTTING CURVED LINES	GC 09035	WIDIA COUNTERBLADE - GC 12S	SW109000	EMERY GRINDING WHEEL SPRING Ø 6 mm	T100700	BRUSH HOLDER
GC 09013	NUT FOR CURVED LINE CUTTING mm 22	GC 09035SX	WIDIA COUNTERBLADE - GC 12SSX	SW109100	SHARPENING DEVICE CAP WITH BEARING	T100800	BRUSH HOLDER CLIP
GC 09014	REAR WHEEL 360° GC-09	GC 09036	CUTTING BASE - GC 12S	SW109200	SHARPENING DEVICE CAP CLAMP SCREW	T100900	BRUSH HOLDER CLAMP SCREW
GC 09015	STARTING PUSH BUTTON	GC 09036CPL	COMPLETE CUTTING BASE - GC 12S	SW109300	STEEL WASHER	T101801	SNAP PIN
GC 09016	MAIN SWITCH	GC 09036SX	CUTTING BASE - GC 12SSX	SW120400	MOTOR BEARING ADJUSTING DEVICE	T102001	UPPER COVER CLAMP SCREW
GC 09017	TURF OPENING SYSTEM	GC 09036SXCPL	COMPLETE CUTTING BASE - GC 12SSX	SW120500	BELLEVILLE THRUST WASHER	T102100	LOWER COVER CLAMP SCREW
GC 09018	RIGHT UNIT FIXING PLATE	GC 09037	COMPLETE MOTOR - GC 12S, GC 12SSX	SW121000	MOTOR BEARING L9	T102201	PAIR OF PERMANENT MAGNETS
GC 09019	LEFT UNIT FIXING PLATE	GC 09038	LITHIUM LUBRICATING GREASE	SW121200	SEAL WASHER	T102702	THREE-PIN SOCKET
GC 09020	LEFT UNIT LIFTING KNOB	GC 09039	BUTTERFLY WRENCH FOR BLADE	SW121500	COOLING FAN	T102904L	CAP SWITCH WITH LIGHT
GC 09021	LINE AIMING SYSTEM	GC 09040	BLADE ASSEMBLING/DISASSEMBLING PIN	SW121600	MOTOR BEARING L12	T104700	GREASE NIPPLE CAP
GC 09022	LINE MEASURE INDICATOR	GC 09041	COUNTERBLADE SUPPORT - GC 12S	SW121700	SNAP RING	T104800	GREASE NIPPLE
GC 09023	SNAP LEVER WITH STUD BOLT AND NUTS	GC 09041SX	COUNTERBLADE SUPPORT - GC 12SSX	SW1219S	LOWER MOTOR COVER	T105200	MOTOR SUPPORT LOCKING BOLT
GC 09024	AIMING SYSTEM SUPPORT CYLINDER	GC 09042	KNOB FOR CYLINDER ROTATION	SW122000	UPPER MOTOR COVER	T105300	SPLIT WASHER
GC 09025	CYLINDER ADJUSTING KNOB	GC 09043	BLADE FIXING COVER	SW125600	BLADE FELT	T105400	ANTIFRICTION BEARING
						T107000	CUTTING BASE CLAMP SCREW

Features of available fuses	
GC 09F25	Glass fuse 2,5A (220V)
GC 09F40	Glass fuse 4A (110V)

Features of available blades	
GC 12SHSS	8-edge blade Ø 120 mm, HSS steel
GC 12SHSSTF	8-edge blade Ø 120 mm, Teflon®-coated, HSS steel

GENERAL VIEW

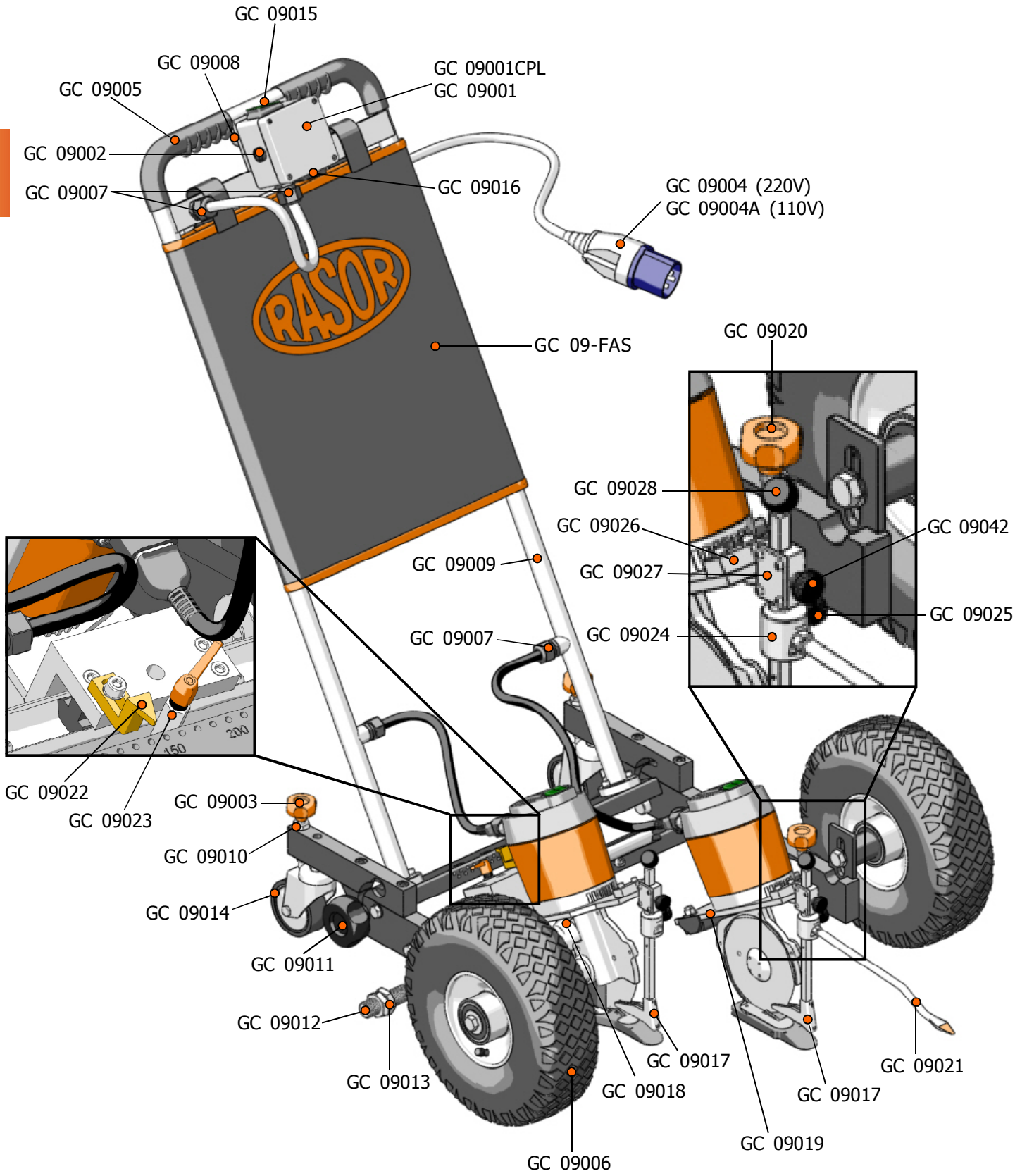

GC 12S

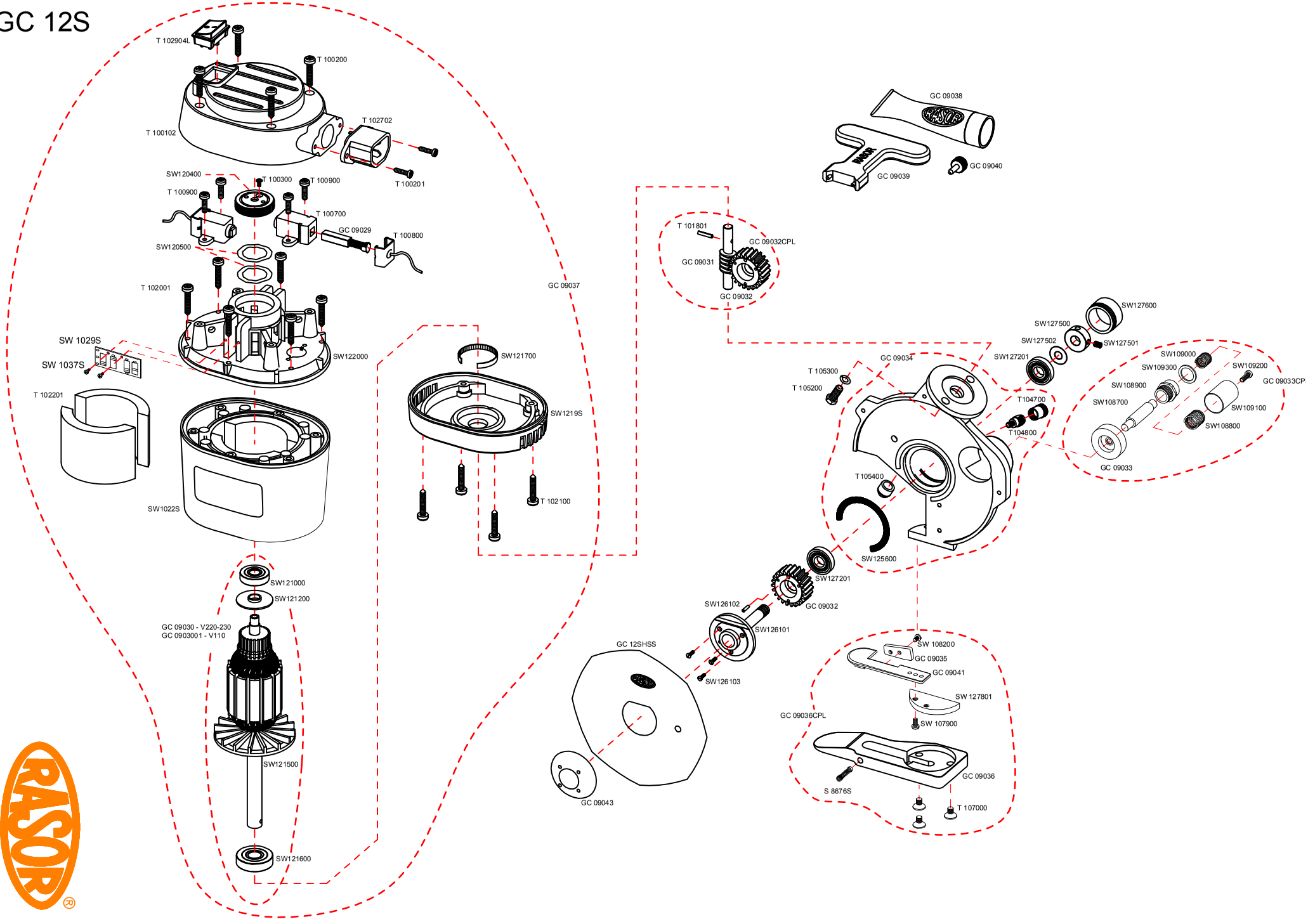

dal 1946

GC 12SSX

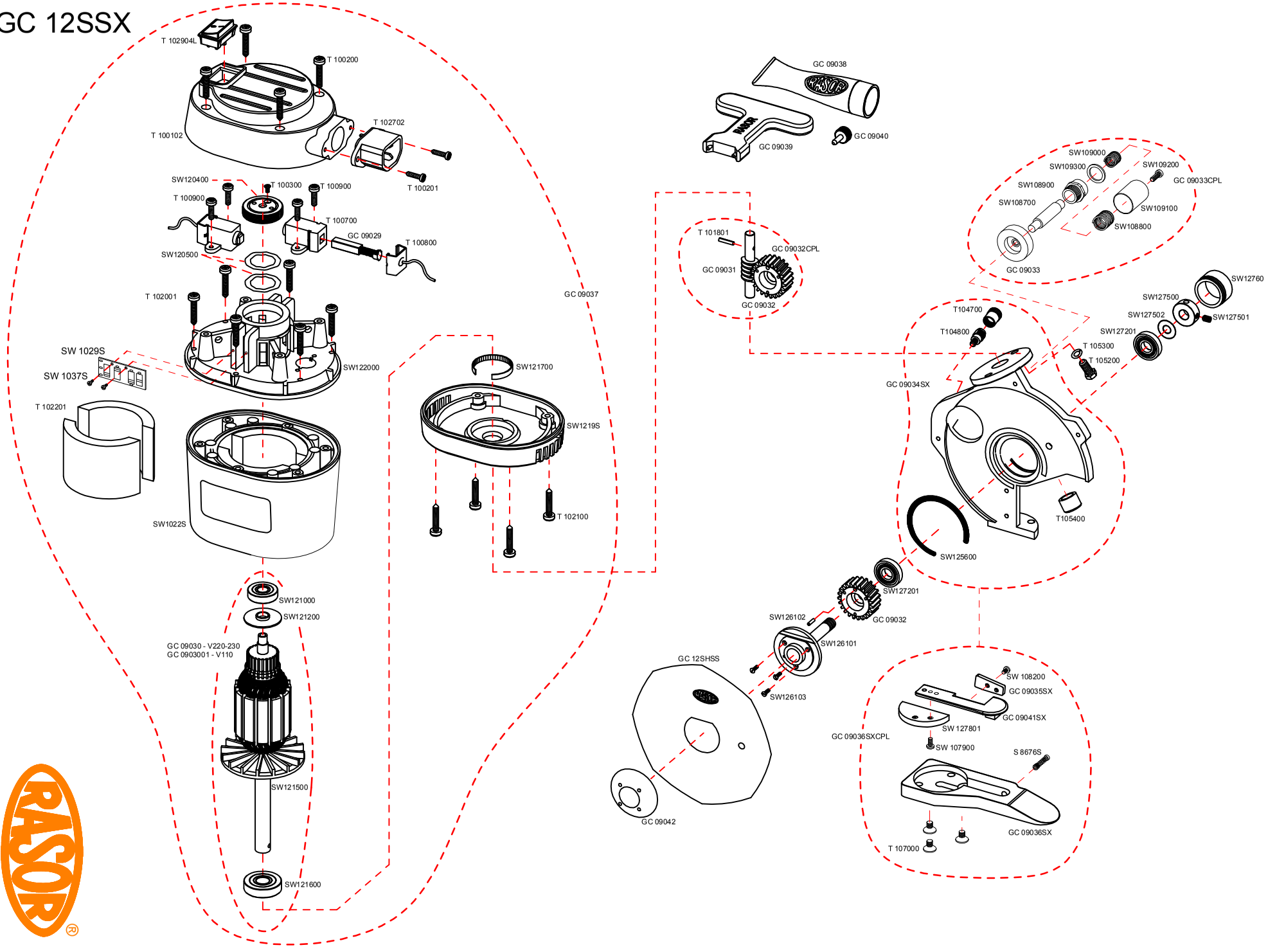

dal 1946

21. OPTIONAL

As previously described, the machine can perform curved cuts. To simplify and improve such an operation, it is advisable to buy the radius kit. These devices allow to perform cuts with different radius.

The above-mentioned kit includes:
- Reference bar;
- Spacing bars (from 2 to 8 pieces);
- Support wheels;
- Central pin.

To use the radius kit, do as follows:
1) Release the rear wheels;
2) Assemble the reference coloured bar and the spacing bars according to the type of radius to be cut (minimum radius: 3 m; maximum radius: 9,15 m.) and according to the diagram given with the kit;
3) Assemble support wheel "A" on bars "B" and lock them in the correct position by means of the 13 mm nut "C" (see picture 32).
4) Drive central pin "D" into the field ground (see picture 32);
5) If the support surface is very hard, use plate "E" (optional), fixing it to the ground by means of dowels or nails "F" (see picture 33);
6) Insert central pin "D" into the plate and drive it into the ground by means of a hammer or using a drill and connect it to bars "B" (see picture 33).

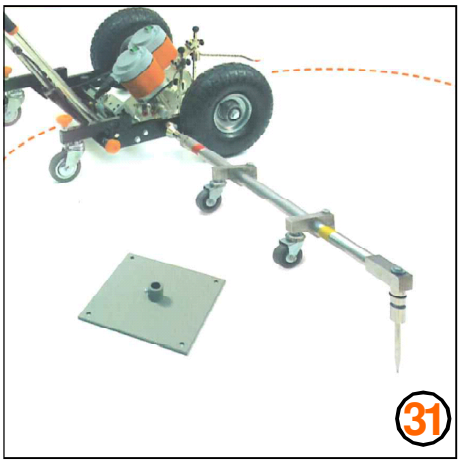

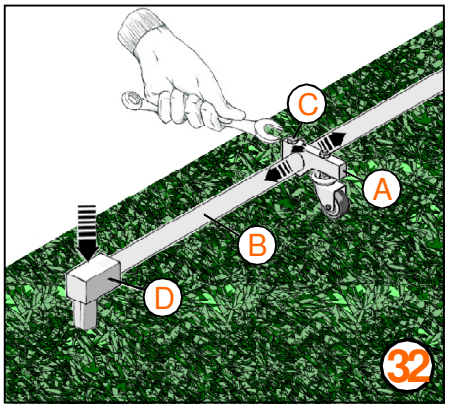

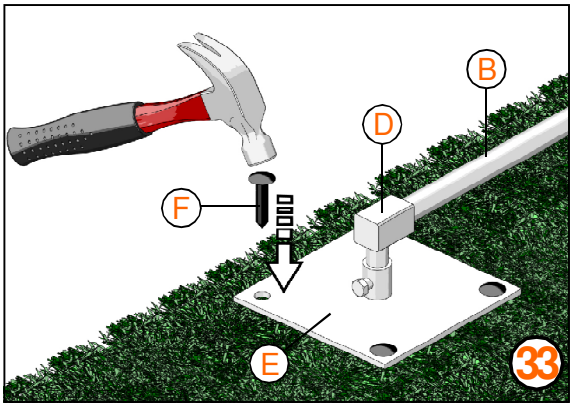

WARRANTY

All the Rasor® Elettromeccanica S.r.l. machines has a 12 month warranty from the date indicated on the last page of this manual, except in case of different written agreements. The warranty covers all manufacturing and material defects. Replacement and repair operations are covered only if carried out by our company and at our workshop.
The material to be repaired must be sent CARRIAGE FREE.
Once the machine has been repaired, it will be sent CARRIAGE FORWARD to the customer. The warranty covers neither technicians' intervention on site nor the machine disassembly from the installation place.
If for practical reasons, one of our technicians is sent to the premises, the customer will be charged the costs plus the travelling expenses.

The warranty does not include:

- ☞ failure caused by wrong use or assembly,
- ☞ failure caused by external agents,
- ☞ failure caused by lack of maintenance or neglicence;
- ☞ blades and parts subject to wear.

WARRANTY FORFEITURE:

- ☞ In case of arrearage or other breaches of contract,
- ☞ Whenever changes or repairs are carried out on our cutters without our prior authorization,
- ☞ Whenever the serial number is tampered with or cancelled,
- ☞ Whenever the damage is caused by improper use, bad treatment, bumps, falls and other causes not due to normal working conditions,
- ☞ Whenever the machine seems tampered with, dismantled or previously repaired by unauthorized staff,
- ☞ In case the machine is used for purposes that are different from the ones described in this manual.

All repair operations carried out under warranty do not interrupt its duration.

All disputes will be settled in the court of justice of Milan (Italy).

We thank you in advance for the attention you will pay to this manual and we invite you to inform us of any change you deem necessary to improve it and make it more complete.

DECLARATION OF CONFORMITY

CE

We hereby certify that the machine specified hereunder complies to the requirements of Machinery Directive 2006/42/EC, Electromagnetic Compatibility 89/336/EEC and CEI EN 60204-1, Directive 2002/44/EC (Legislative Decree 187 of 19/08/2005) and to technical rulings UNI EN 414:2002, UNI EN ISO 12100-1:2005 and UNI EN ISO 12100-2:2005.

Noise tests have been carried out according to UNI EN ISO 11202 Standards.

GreenCutter GC-09 has been produced according to workmanlike standards.

We declare that the above-mentioned goods comply with the standards in force concerning safety and hygiene at work that can be applied to the material itself according to local standard; the above-mentioned goods are not included in the goods indicated in annex IV, art. 4, paragraph 1, letter a), Law No. 459 of 24 July 1996.

1. Category: **GREENCUTTER**
2. Manufacturer: **RASOR®ELETTROMECCANICA S.R.L.**
3. Type: **GC-09**
4. Greencutter serial number: .....

4a. Right cutting unit serial number: .....

4b. Left cutting unit serial number: .....

5. Year of manufacture: .....
6. Manufactured in: **ITALY**
7. Additional information: .....
8. Fittings: ☐ KIT ☐ PLATE ☐ AUXILIARY LINE AIMING SYSTEM

Date:

_____

RASOR ELETTROMECCANICA S.R.L.
CUTTING EQUIPMENTS

Warranty expiry:
12 months invoice date or receipt

(Signature)

RASOR®
dal 1946

Authorized dealer

(Stamp)